MADBOT

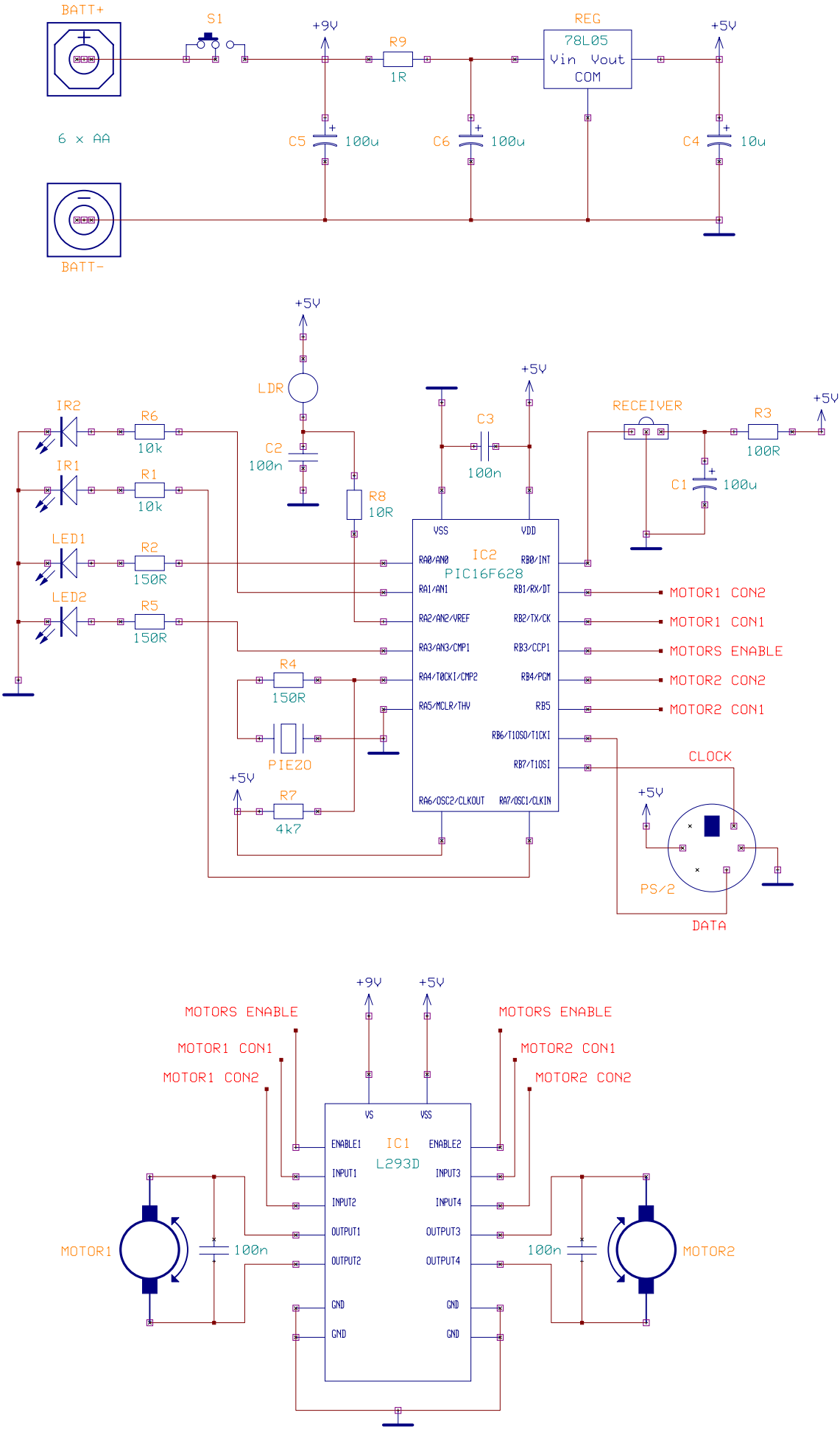
BATT+
S1
+9V
R9
1R
REG
78L05
Vin Vout
COM
+5V
6 x AA
C5 100u
C6 100u
C4 10u
BATT-
+5V
LDR
C2
100n
IR2
R6
10k
IR1
R1
10k
LED1
R2
150R
LED2
R5
150R
R8
10R
C3
100n
+5V
RECEIVER
R3
100R
+5V
C1 100u
VSS
VDD
IC2
PIC16F628
RA0/AN0
RB0/INT
RA1/AN1
RB1/RX/DT
RA2/AN2/VREF
RB2/TX/CK
RA3/AN3/CMP1
RB3/CCP1
RA4/T0CKI/CMP2
RB4/PGM
RA5/MCLR/THV
RB5
RB6/T1OSO/T1CKI
RB7/T1OSI
RA6/OSC2/CLKOUT
RA7/OSC1/CLKIN
MOTOR1 CON2
MOTOR1 CON1
MOTORS ENABLE
MOTOR2 CON2
MOTOR2 CON1
R4
150R
PIEZO
+5V
R7
4k7
CLOCK
+5V
PS/2
DATA
+9V
+5V
MOTORS ENABLE
MOTOR1 CON1
MOTOR1 CON2
MOTORS ENABLE
MOTOR2 CON1
MOTOR2 CON2
VS
VSS
ENABLE1
IC1
L293D
ENABLE2
INPUT1
INPUT3
INPUT2
INPUT4
OUTPUT1
OUTPUT3
OUTPUT2
OUTPUT4
GND
GND
GND
GND
MOTOR1
100n
100n
MOTOR2