NOISE-X

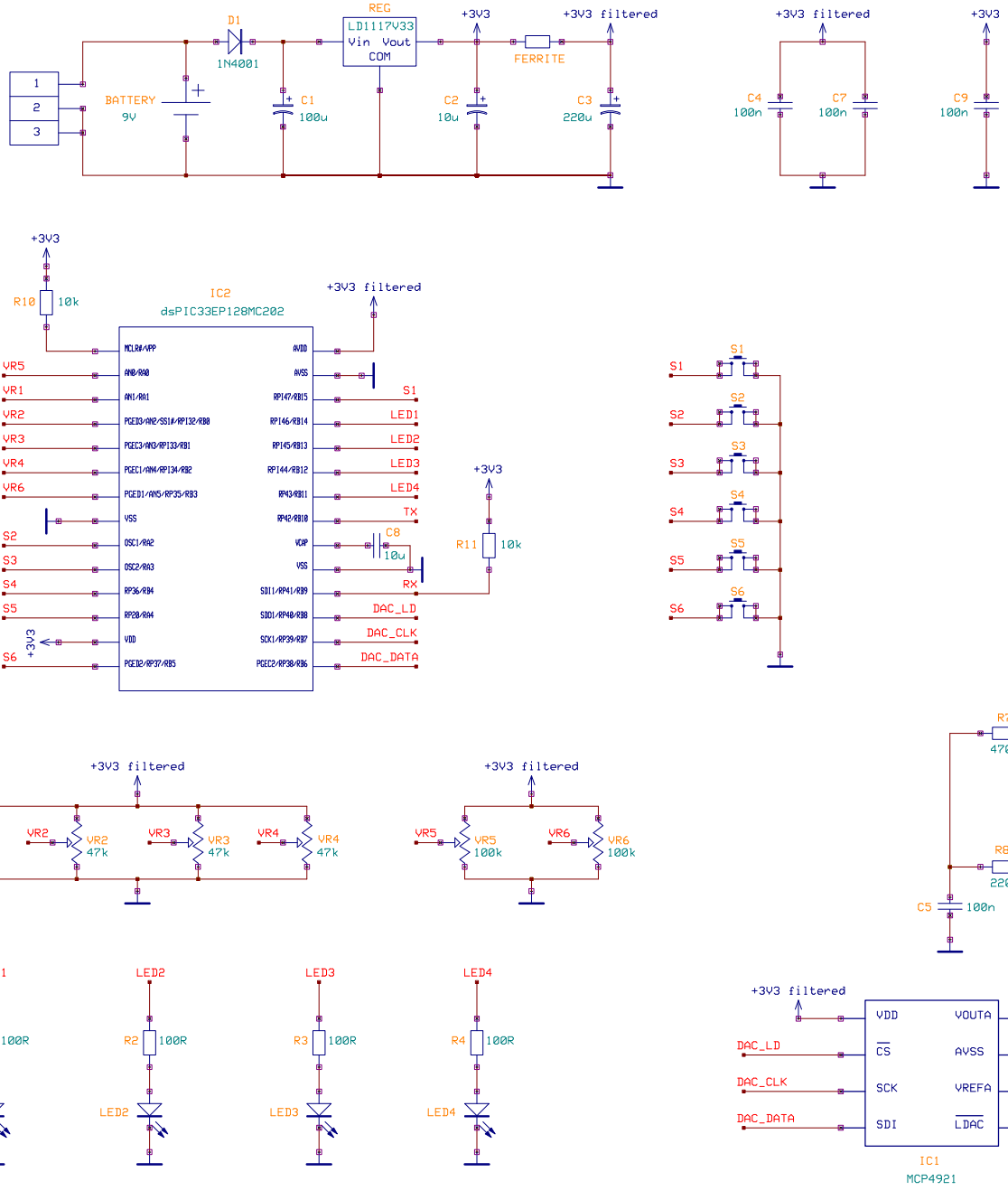
REG
LD1117V33
Vin Vout
COM
D1
1N4001
BATTERY
9V
C1
100u
C2
10u
C3
220u
FERRITE
+3V3
+3V3 filtered
C4
100n
C7
100n
C9
100n
R10
10k
IC2
dsPIC33EP128MC202
MCLR#/VPP
AN0/RA0
AN1/RA1
PGEC3/AN2/SS1#/RP132/RB0
PGEC3/AN3/RP133/RB1
PGEC1/AN4/RP134/RB2
PGED1/AN5/RP35/RB3
VSS
OSC1/RA2
OSC2/RA3
RP36/RB4
RP20/RA4
VDD
PGED2/RP37/RB5
AVDD
AVSS
RP47/RB15
RP46/RB14
RP45/RB13
RP44/RB12
RP43/RB11
RP42/RB10
VCAP
VSS
SDI1/RP41/RB9
SDO1/RP40/RB8
SCK1/RP39/RB7
PGEC2/RP38/RB6
VR5
VR1
VR2
VR3
VR4
VR6
S2
S3
S4
S5
S6
S1
LED1
LED2
LED3
LED4
TX
RX
DAC_LD
DAC_CLK
DAC_DATA
C8
10u
R11
10k
VR1
47k
VR2
47k
VR3
47k
VR4
47k
VR5
100k
VR6
100k
R7
470R
TR1
2TX689B
C6
220u
AUDIO
R9
100R
R8
220R
C5
100n
R1
100R
R2
100R
R3
100R
R4
100R
VDD
CS
SCK
SDI
VOUTA
AVSS
VREFA
LDAC
IC1
MCP4921
R6
10k
R5
10k