NOISE-X

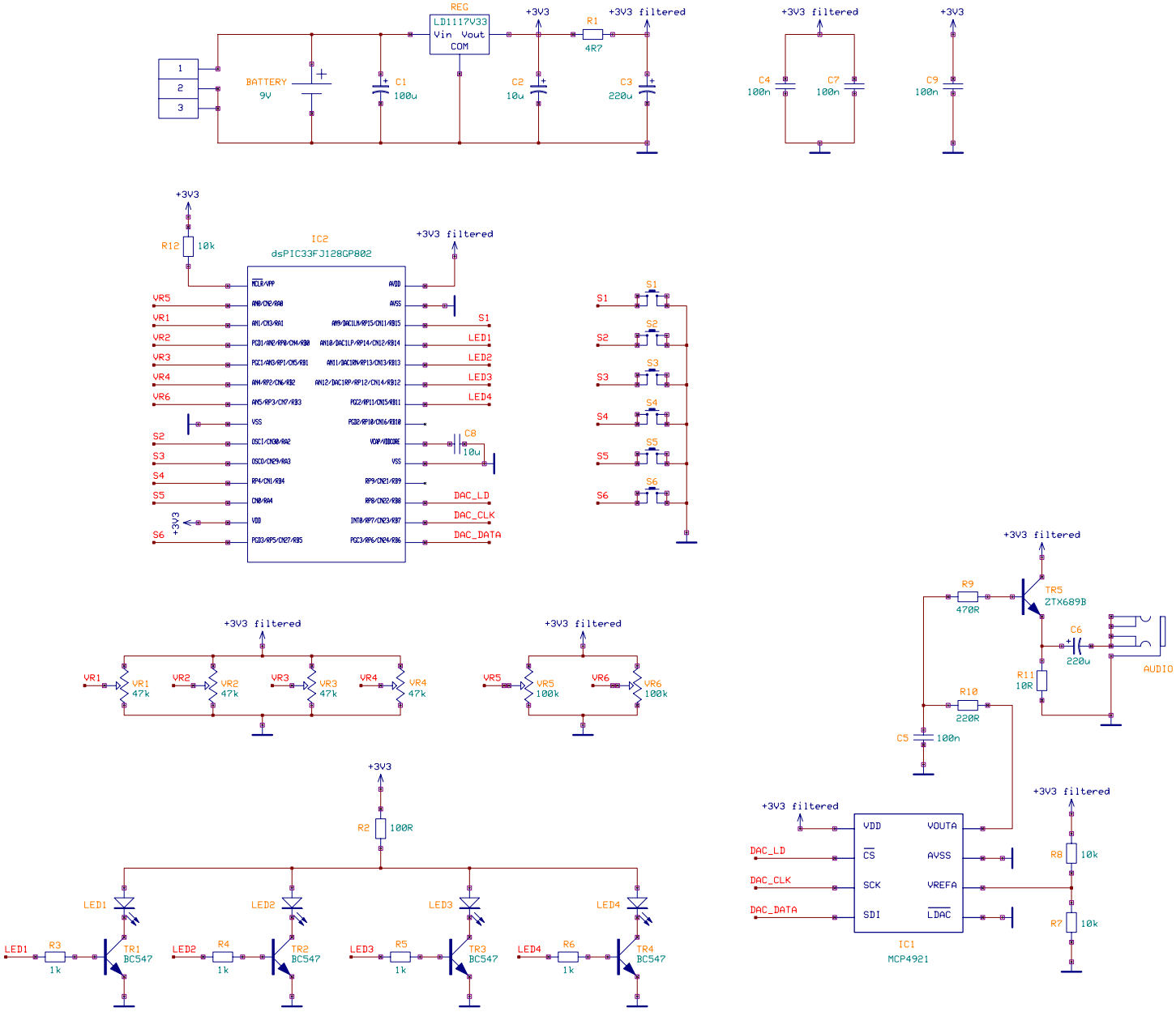
REG
LD1117V33
Vin Vout
COM
+3V3
R1
4R7
+3V3 filtered
BATTERY
9V
C1
100u
C2
10u
C3
220u
C4
100n
C7
100n
C9
100n
R12
10k
IC2
dsPIC33FJ128GP802
C8
10u
DAC_LD
DAC_CLK
DAC_DATA
S1
S2
S3
S4
S5
S6
LED1
LED2
LED3
LED4
VR1
VR2
VR3
VR4
VR5
VR6
47k
100k
R2
100R
R3
R4
R5
R6
1k
TR1
TR2
TR3
TR4
BC547
R9
470R
TR5
ZTX689B
C6
220u
AUDIO
R11
10R
R10
220R
C5
100n
IC1
MCP4921
VDD
CS
SCK
SDI
VOUTA
AVSS
VREFA
LDAC
R8
10k
R7
10k