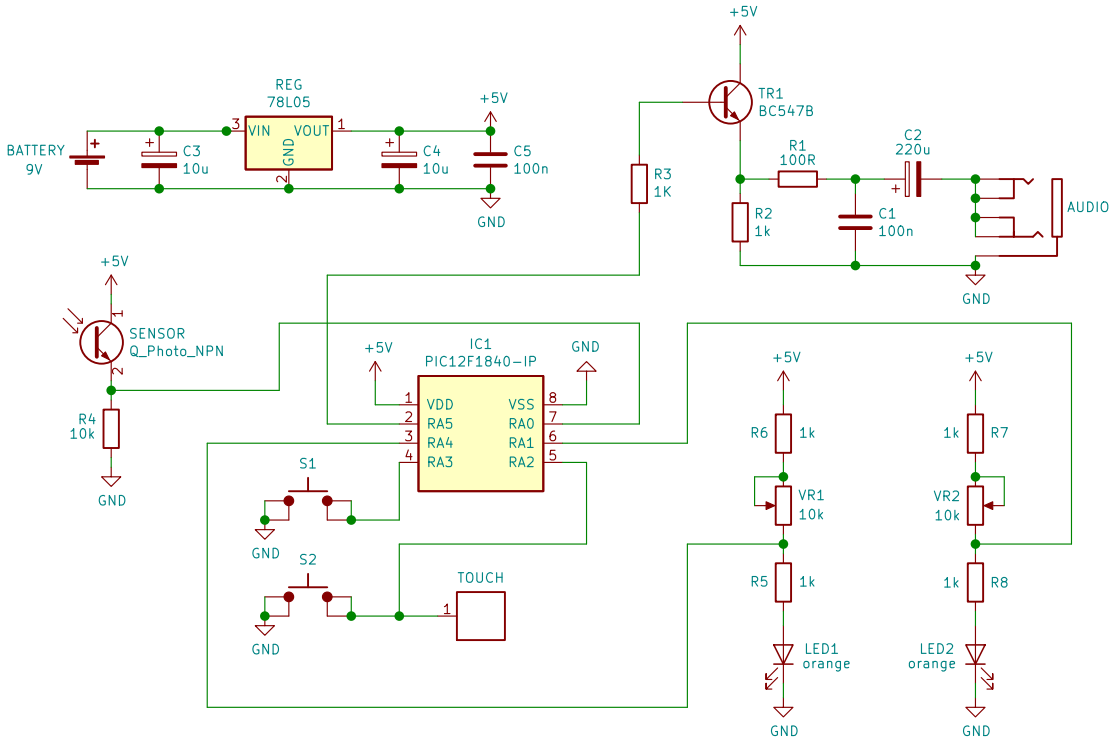

MadLab Ltd.

Sheet: /

File: Scuttlebut.sch

Title: Scuttlebut

Size: A4	Date: 2019-05-15	**Rev: v1.0**
KiCad E.D.A. eeschema (5.1.5)-3		Id: 1/1